OTFT on Plastic Substrate for AMOLED Driving

Junhee Kim[1,2], Seung Hoon Han[1,2], Sang Mi Cho[1,3], Sun Hee Lee[1,4], Young Rae Son[1,2], Ki Jung Lee[1,2], Wan Sun Kim[1,2] Tae Jin Park[1,2], Yong Kyun Lee[1,2], Myung Hwan Oh[3], Dong Joon Choo[1,4], Jin Jang[1,2]

[1]Advanced Display Research Center, Kyung Hee University, Seoul, Korea

[2]Dept. of Information Display & Physics, Kyung Hee University, Seoul, Korea

[3]School of electrical, electronics and computer engineering, Dankook University, Seoul, Korea

[4]Dept. of Chemistry, Kyung Hee University, Seoul, Korea

Abstract

Organic thin-film transistor (OTFT) array using pentacene active layer has been fabricated on plastic substrate for driving active-matrix organic light-emitting diode (AMOLED) display. Pentacene active layer was selectively grown on the TFT area with self-organized process. The OTFTs before passivation process exhibited an average field-effect mobility of 0.8 cm^2/Vs, an on/off current ratio of 10^8, and a V_{th} of -8V. The on-current decreases by 40% after being encapsulated by organic layers of polyvinyl alcohol and photo acryl. The on-current is still higher than 1 uA and off-state current is less than 0.1 pA, so that the OTFT can be used for AMOLED driving.

Introduction

Organic electronics are of great interest because of their potential use in lightweight, flexible, thin, low-cost and power-efficient displays.[1] Recently, organic light-emitting diodes (OLEDs) are intensively studied and developed in order to realize the display with faster response time, wide viewing angle, higher contrast and lower power consumption. In addition, in case of flexible display on plastic, OLED is the best because of its low processing temperature and flexibility. [2]

Active-matrix OLED (AMOLED) has several advantages over the passive-matrix OLED such as lower power consumption and longer lifetime. Therefore, amorphous silicon (a-Si) and poly-Si AM are developed and shoed good display performance. [3] The glass substrate is mostly used, however, AMOLED on plastic is also being studied for flexible AMOLED. The disadvantage of a-Si and poly-Si is higher process temperature.

On the other hand, the process temperature of OTFT is rather lower, so that OTFT on plastic can be a good solution for flexible AMOLED. Therefore, OTFTs on plastic is of increasing interests. However, there are critical issues such as uniformity of the performance of OTFTs, passivation layers and lifetime. There have been only a few reports on OTFT arrays for AMOLED on plastic. [2,4]

In this work, we studied the fabrication of pentacene TFT-driven AMOLED backplane (80 dpi, 124 × 64 pixels) on plastic substrate. In order to make a bottom emissive AMOLED, we developed pentacene OTFT array using self-organized process to make selective growth of pentacene layer on TFT region, not on the pixel region.

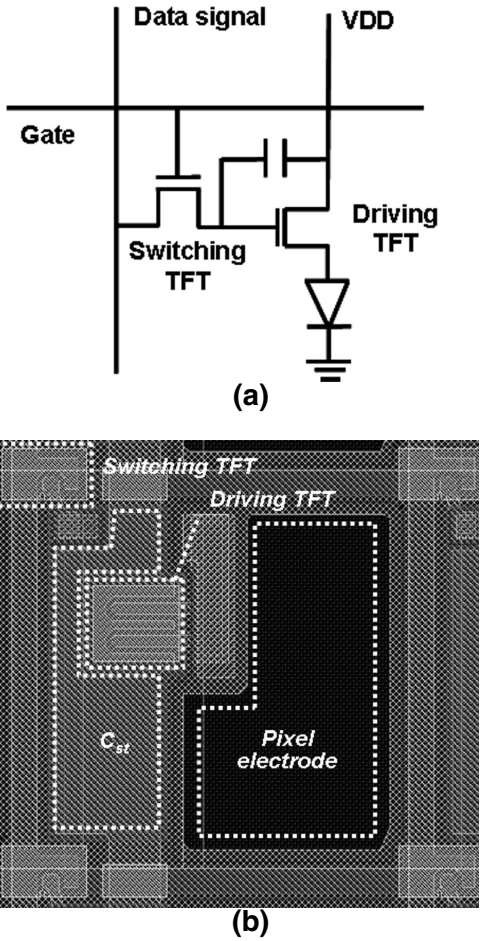

Figure 1. The schematic of a pixel circuit (a) and the designed layout for a pixel (b).

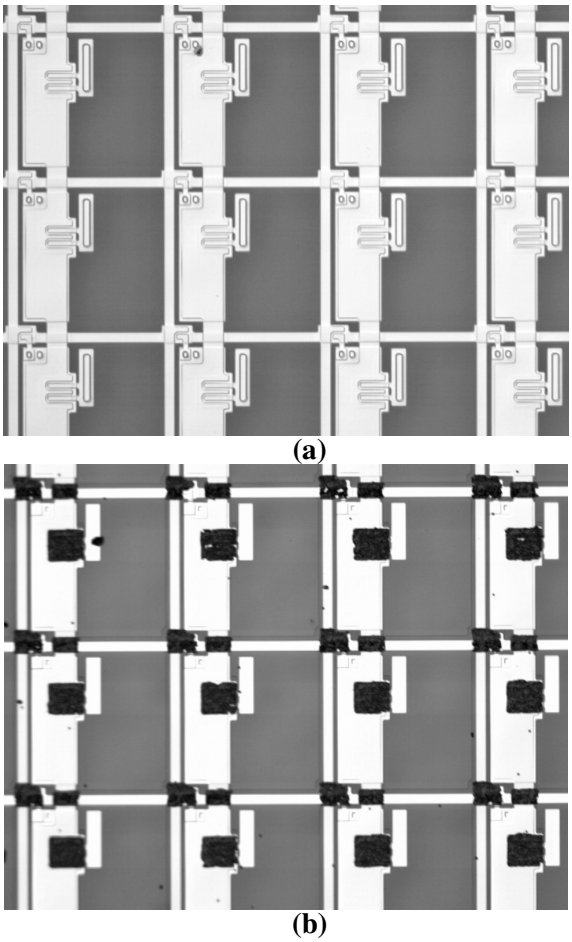

Figure 2. The optical microscope images of the AMOLED backplane (a) before and (b) after pentacene growth

Fabrication

Figure 1 shows the schematic of a pixel circuit and design layout for an AMOLED pixel. Each pixel can be driven for OLED using a switching TFT (W / L = 37 ㎛ / 6 ㎛), a driving TFT (W / L = 236 ㎛ / 6 ㎛), and a storage capacitor. The panel has 128 × 64 pixels over 2 inch diagonal plastic substrate. The OTFTs with inverted staggered structure were fabricated using 6 mask process.

Polyethersulfone (PES) was used as a plastic substrate which was annealed at 180℃ for 24 hrs for degassing and then silicon-nitride (SiN_x) in 100 nm thickness was deposited on both sides as gas barriers [5]. Ductile metal, AlNd, was sputtered on the gas barrier as a gate electrode and Cr / Au as source / drain electrodes on the cross-linked PVP. On gate electrodes, gate insulator of poly-4-vinylphenol (PVP) with cross-linking agent was spin-coated and cured in a vacuum oven at 180°C. Indium zinc oxide (IZO) was deposited by reactive sputtering and patterned for pixel electrode.

We used the selective growth technique of pentacene using self-organized process. [7] The pentacene was grown by organic vapor deposition (OVD) [8]. The TFT area should be hydrophobic and the pixel region must be hydrophilic. In the present work we used the OTS treatment on PVP to make hydrophobic surface, on the other hand, the SiNx surface is hydrophilic even after OTS treatment.

We made the contact holes on the cross-linked PVP and then IZO was deposited and patterned for anode. With the photoresist barrier on the TFT channel regions a very thin SiNx was deposited and then lifted off. Then, pentacene was grown by OVD. In this case the pentacene go to the hydrophobic surface with no growth on the SiNx layer. This is the selective growth technique. [7,9]

Figure 2 shows the optical image after the pentacene growth by OVD. The clear image can be seen on the TFT areas of switching and driving TFTs of which the larger one is for driving. [9] The smallest black rectangular dot in a pixel is due to the mask design for the a-Si:H AM backplane. Note that we used the masks for a-Si backplane in this work.

The passivation layer was formed on the TFT backplane to protect OTFT layers from O_2 and H_2O in the atmosphere. In this work we used double layers of organic materials of polyvinylalcohol (PVA) and photoacryl. [9]

The passivation process needs not only organic layers but also inorganic because organic materials are not enough to protect the organic semiconductor from water and oxygen adsorption in atmosphere. As the first passivation layer, PVA has been mixed with ammonium dichromate to make it possible to define patterns by photolithography method. Spin-coated PVA could be developed by water, so it has to be dried in vacuum for a few hours. After PVA passivation, photo-acryl layer also has been spin-coated and patterned by using photolithography system.

Figure 3 shows a cross-sectional view of a pixel after whole processes. The measurement was carried out in atmosphere before and after passivation process.

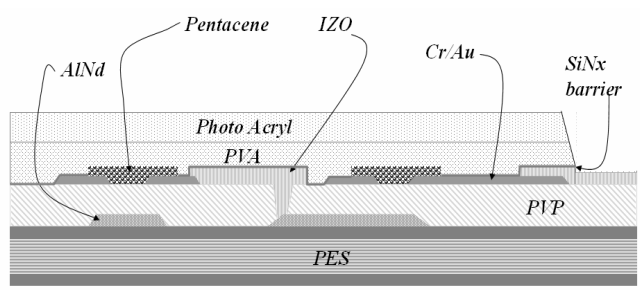

Figure 3. A cross-sectional view of an OTFT array for AMOLED on plastic

Result & Discussion

OTFT characteristics

Figure 4. shows the transfer characteristics of a pentacene TFT with the W / L = 236 ㎛ / 6 ㎛ for driving TFT. The measurement was performed just after pentacene deposition to analyze the initial OTFT characteristics. The field-effect mobility of 1.0 cm^2/Vs in saturation region, the threshold voltage (V_{th}) of -6.7 V, the subthreshold swing (S) of 0.9 V/dec. and an on-off current ratio of 10^8 have been measured. The current is higher than 1 uA and the off-state current is less than 0.1 pA, which is suitable to drive the AMOLED.[11, 12]

After the passivation layers on the organic semiconductor, the performance degrades as shown in Fig. 4(b). The on-current is 1

uA level and the off-state currents are less than 0.1 pA, so that this TFT could be used for driving TFT for AMOLED backplane.

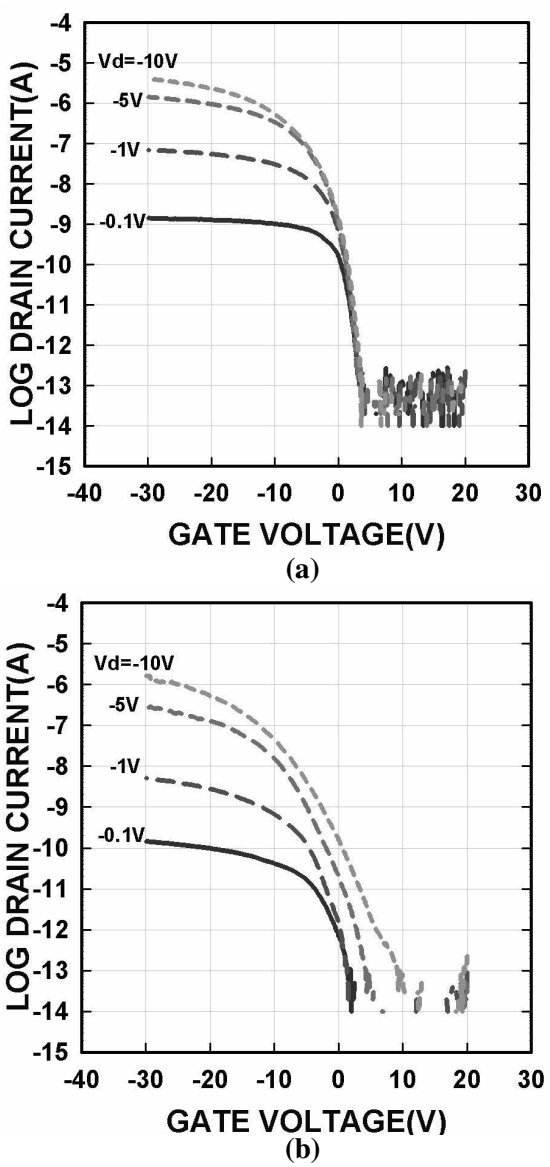

Figure 4. The characteristics of pentacene TFT (W / L = 236 ㎛ / 6 ㎛) (a) before and (b) after PVA / photo acryl passivation process.

The reduction in on current after the passsivation is 47% which can be reduced by improving the passivation process. Fig. 4(b) shows the transfer characteristics of the degraded TFT by passivation. The field-effect mobility of 0.53 cm^2/Vs and on/off current ratio of 10^7 were found. The H_2O absorbed in PVA and in between pentacene grains could capture charges in channel and degrade the TFT performances.[13] Also, organic solvents of photo acryl passivation layer can damage the TFT performance. [14]

A selective deposition process for pentacene growth using SiNx barrier layer was introduced in this paper. The on-current of OTFT after the passivation layers was found to be higher than 1 uA, which can drive the OLED at low level of brightness.

Conclusion

The structure and performance of AM backplane using OTFT were studied in the present work. The self-organized process for the growth of pentacene semiconductor only on the TFT area was used to pattern the active layer for OTFT. The OTFT exhibited the field-effect mobility of 1.0 cm^2/Vs before passivation but it degrades to 0.53 cm^2/Vs after the passivation layer coatings. The leakage current is less than 0.1 pA, indicating that the on/off current ratio is high than 10^7.

Acknowledgement

This research was supported by a grant (F0004082) from Information Display R&D center, one of the 21st Century Frontier R&D Program funded by the Ministry of Commerce, Industry and Energy of Korean government.

References

[1] S. H. Won, C. B. Lee, J. K. Chung, H. C. Nam, M. P. Hong, B. S. Kim, Y. U. Lee, S. H. Yang, J. M Huh, K. H. Chung and J. Jang, SID 03, pp.992-995, (2003)
[2] Y. Inoue, Y. Fujisaki, T. Suzuki, S. Tokito, T. Kurita, M. Mizukami, N. Hirohata, T. Tada, S. Yagyu, International Display Workshop 2004, pg. 355 (2004)
[3] T. Chuman, S. Ohta, S. Miyaguchi, H. Satoh, T. Tanabe, Y. Okuda, M. Tsuchida, SID'04 Digest, pg. 45 (2004)
[4] J. –J. Lih, C. –F. Sung, C. –H. Li, T. –H. Hsiao, and H. –H. Lee, J. Soc. Inf. Display, vol. 12, pg. 367-371, (2004)
[5] C. R. Kagan, and P. Andry, "Thin-Film Transistors", Marcel Dekker, INC. (2003)
[6] M. Baldo, M. Deutsch, P. Burrows, H. Gossenberger, M. Gerstenberg, V. Ban, S. Forrest, Adv. Mater 10: 1505-1514, (1998)
[7] H. Y. Choi, S. H. Kim and J. Jang, Adv. Mater. 16, pg. 732, (2004)
[8] J.S. Jung, K.S. Cho and J. Jang, J. Kor. Phys. Soc. 42, S428, (2003)
[9] S. H. Kim, H. Y. Choi and J. Jang, Appl. Phys. Lett. 85, pg. 4514 (2004)
[10] J. H. Kim, S. H. Han, S. M. Cho, S. H. Lee, E. Y. Lee, J. H. An, M. H. Oh, D. J. Choo, and J. Jang, Proc. IDW / AD '05, vol 2, pg 1093, (2005)
[11] C. D. Sheraw, L. Zhou, J. R. Huang, D. J. Gundlach, T. N. Jackson, M. G. Kane, I. G. Hill, M. S. Hammond, J. Campi, B. K. Greening, j. Francl and J. west, Appl. Phys. Lett., 80, pg. 1088, (2002)
[12] L. Zhou, S. Park, B. Bai, J. Sun, S. C. Wu, T. N. Jackson, S. Nelson, D. Freeman, and Y. Hong, IEEE Elec. Dev. Lett. vol. 26, no. 9, pg. 640, (2005)
[13] Y. Qiu, Y. Hu, G, Dong, L. Wang, J. Xie and Y. Ma, Appl. Phys. Lett., 83, pg. 1644, (2003)
[14] S. H. Han, J. H. Kim, B. J. Kim, J. H. Ahn, S. H. Won, S. H. Lee, D. J. Choo, S. M. Cho, M. H. Oh, and J. Jang, Proc. ITC 05, pg. 135, (2005)

Author Biography

Junhee Kim was born in Seoul, Korea, on March 4th, 1978. He received the B.S. degree from Kyung Hee University, Seoul, Korea, in 2004. He is currently pursuing the M.S. degree in the Department of Physics at the same university. He has studied organic thin-film transistor for organic electronics.